fonitronik SSM2044 VCF Rev3.0

doc rev3.1

capacitors

C1, C2	100n (decoupling)
C3, C4, C10	10uf (elec)
C5	820pF (silver mica)
C6, C7, C8	10n (poly)
(+6 addidional caps for decoupling)	
C9	15pF (silver mica)

resistors

R1, R2	22R
R3, R14	220R
R12	1k
R17	1k PT146 (3500)
(or regular 1K if no compensation needed)	
R13, R24	4.7k
R4, R5, R6, R7	
R10, R15, R19	47k
R8, R9, R23	100k
R16	150k
R18	200k
R11	300k

precision trimmer

T1 (1V/oct)	50k
T2 (freq offset)	50k
T3 (q point)	20k

semi's

U1	SSM2044
U2, U3	TL072

potentiometer

P1 (gain)	50k
P2 (cutoff)	50k
P3 (CV2 att.)	50k
P4 (Q control)	50k
P5 (Q CV att.)	50k

connections

W1	audio in
W2	CV1
W3	CV2
W4	Q CV
W5	audio out
W6	GND

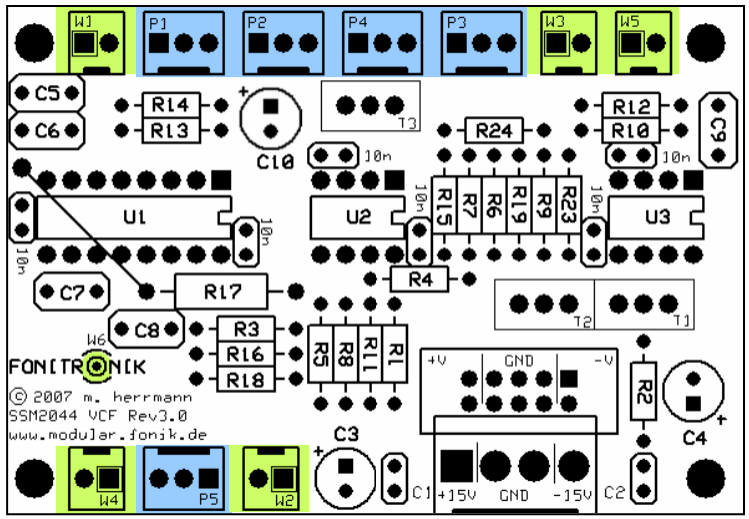

ERRATA: C10 polarization swapped on PCB!
Sketch above shows correct orientation.

There are 6 decoupling capacitors on the layout not mentioned in the schematic. They are labeled 10n.

R17 can be substituted by an regular 1k resistor if you don't care about temp compensation. R17 can be mounted in two ways: use the footprint for R17 or mount it along the thin line that goes across the SSM2044 IC (if you think you want it in physical contact to the IC).

Setting up the filter:
First and the foremost this is an VCF, not an VCO. Therefore expect this filter to stay in tune for not more than about 3 octaves.
Set all controls to zero first, except the cutoff.
Apply an audio signal and adjust the response of the cutoff potentiometer according to your taste using the offset trimmer T2.
Now raise the Q potentiomer until the filter starts to oscillate. Adjust the Q potentiometer using trimmer T3. It lets you set the point of turning where the filter starts to oscillate.
Apply 1V/oct control voltage source to CV 1 and leave the audio input off. Now you can adjust the 1V/oct response using trimmer T1.

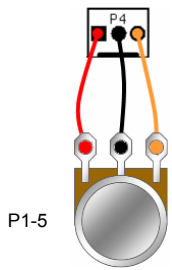

rear view

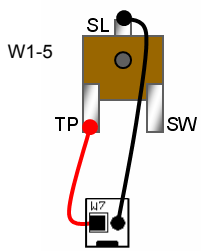

front panel suggestion:

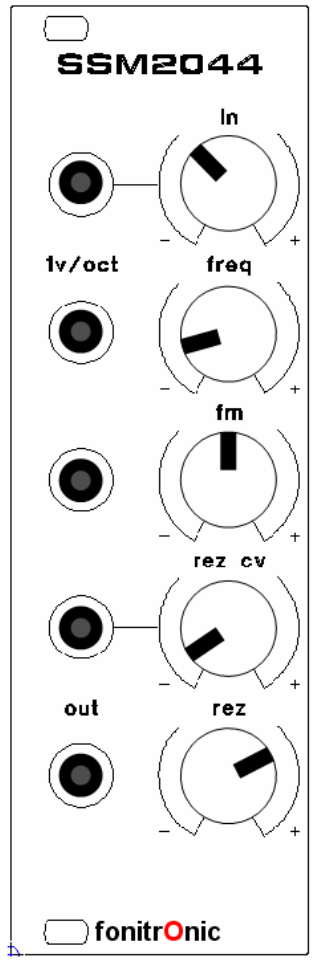

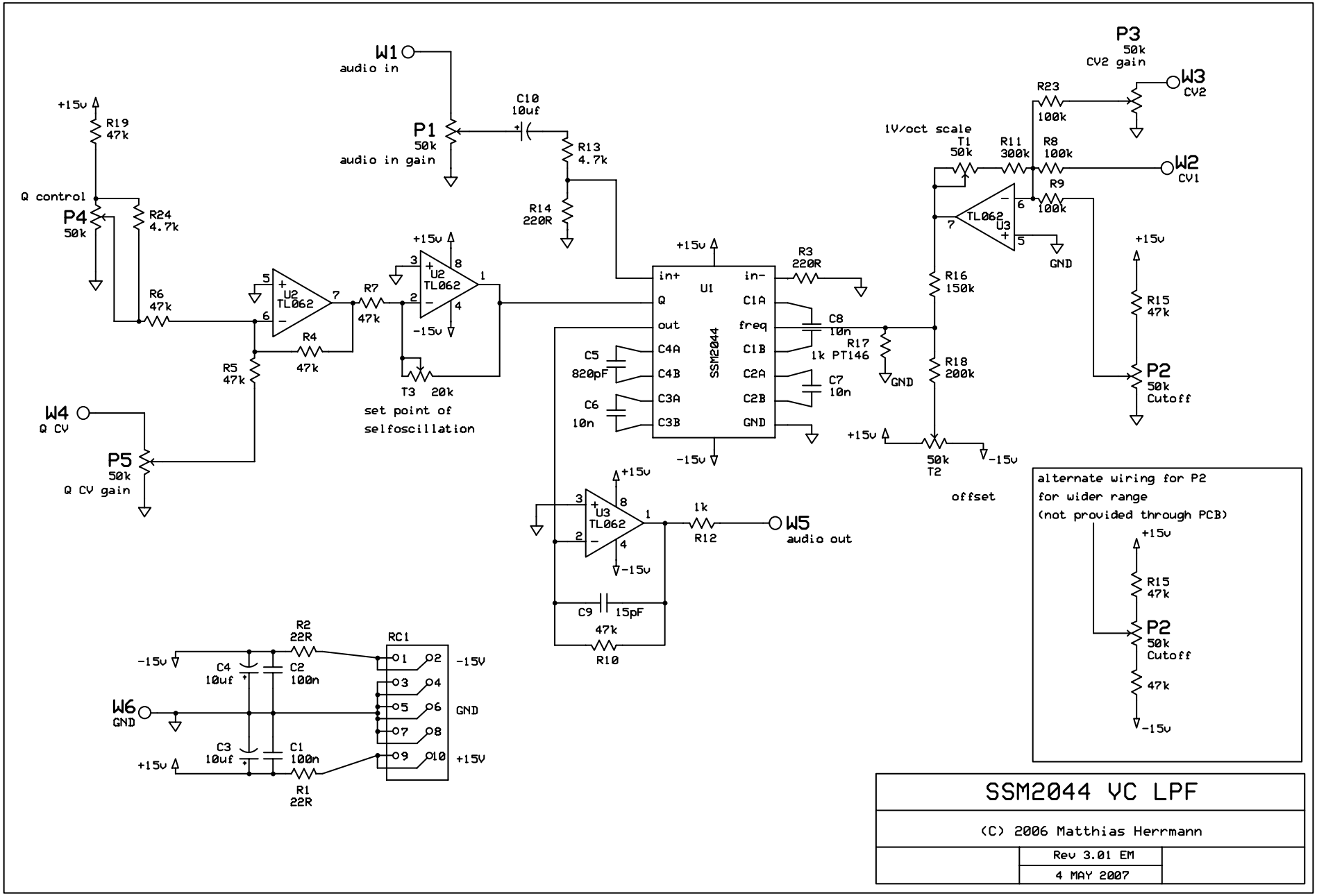
W1
audio in
P1
50k
audio in gain
C10
10uf
R13
4.7k
R14
220R
+15v
R19
47k
Q control
P4
50k
R24
4.7k
R6
47k
U2
TL062
R7
47k
R4
47k
R5
47k
W4
Q CV
P5
50k
Q CV gain
T3 20k
set point of
selfoscillation
U1
SSM2044
in+
Q
out
C4A
C4B
C3A
C3B
in-
C1A
freq
C1B
C2A
C2B
GND
R3
220R
C8
10n
R17
1k PT146
C7
10n
C5
820pF
C6
10n
-15v
U3
TL062
1k
R12
W5
audio out
C9 15pF
47k
R10
P3
50k
CV2 gain
W3
CV2
R23
100k
1V/oct scale
T1
50k
R11
300k
R8
100k
W2
CV1
R9
100k
GND
R16
150k
R18
200k
50k
T2
offset
R15
47k
P2
50k
Cutoff
alternate wiring for P2
for wider range
(not provided through PCB)
R2
22R
RC1
C4
10uf
C2
100n
W6
GND
C3
10uf
C1
100n
R1
22R
SSM2044 VC LPF
(C) 2006 Matthias Herrmann
Rev 3.01 EM
4 MAY 2007