INTRODUCTION

This document contains additional information for building Thomas Henry's CMOS ADSR using my fonitronik DIY PCBs.
The actual documentation of the original circuit design could be found here:
CMOS ADSR with built-in light show (electro-music.com)
For functionality and usage refer to these original document. You will find the schematics and BOM there, too.

The fonitronik DIY PCBs allow to build this ADSR according to Thomas' original documentation (schematics and BOM), however, they add additional circuitry to add gate outputs for the single stages and an end trigger pulse, and a footprint for a 3rd timing cap to get three rate ranges.
Also there is a 2nd optional PCB for PCB-mounted front panel components, which is in eurorack format to fit the machined/printed front panel. It provides an additional switch which routes the end trigger to the trigger input, making this ADSR an LFO with Attack and Decay control.

This results in several building options:

A. Hardware:
1. Using just the Circuit PCB
2. Using both the Circuit and the Front Panel Components PCB.
B. Circuit:
1. Adding a 3rd rate range
2. Adding a LFO mode switch
3. 100% according to Thomas original design.
4. Adding stage gates and end trigger

OPTIONS

A. HARDWARE

1. Using just the Circuit PCB
The PCB provides MTA-100 footprints to make the manual wiring of the front panel components easier. GND reference is provided with each MTA connector (except the switches, or certain LEDs), all connections are according to schematic.
See wiring guide below:

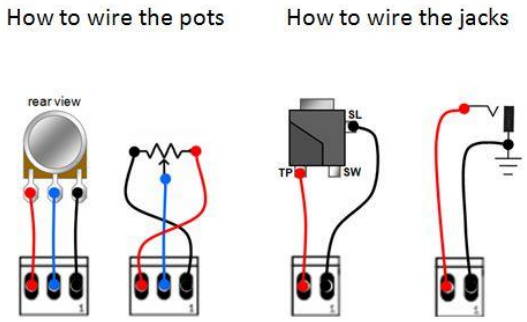

2. Using both the Circuit and the Front Panel Components PCB.
The Front Panel Components PCB can be mounted piggy back to the actual circuit PCB. To do this in a proper way single row connectors should be used (male and female). Both rows have 32 pins with a .1 spacing. The PCB asks for a standard miniature SPDT on-off switch for the mode (ADSR/LFO), and a standard miniature SPDT on-off-on switch for the three rate ranges (you could also just use another on-on to have just the two original ranges).
The Front Panel Components PCB offers footprints for 9mm potentiometers, PJ301-B jack sockets, and miniature switches:

Almost any 9mm vertical mount Potentiometer should do. I like the Alpha's available from Small Bear Electronics LLC:
Alpha Single-Gang 9mm Right-Angle PC Mount

The sockets are available from THONK(Europe) or ERTHENVAR (USA)

B. CIRCUIT

1. Adding a 3rd rate range
The original schematic shows C8 and C11 as timing caps, with C8 always in circuit and C11 switched in in parallel. So C8 has to be the smaller value, C11 the larger value. One would use a SPDT on-on toggle to switch C11 on and off.
The PCB provides a footprint for an additional/optional 3rd timing cap. If you populate it, you will have to use a SPDT on-off-on toggle to switch on C11, the optional cap or leave them both off of the circuit, thus giving you the three ranges md, hi, lo.
The values are totally up to you. The caps don't have to be polarized anyways. I used 0.1uF (C8), 1uF (OPT), and 10uF (C11). Here is room for experimentation…

2. Adding a LFO mode switch
Nothing special, actually. By design the gate input comparator is normalled to the the trigger input. Route the end trigger back into the trigger normalling input instead. Now you have an AD generator that is looped. To start the 'oscillation' you might have to turn the sustain knob up and down. Use a SPDT on-on switch. You can just patch it of course.
The additional Front Panel Components PCB already routes the end trigger to the switching contact of the trigger input via a switch.

OPTIONS (CON'T)

CIRCUIT

3. 100% according to Thomas original design.
See above. Nothing much to say about it. Just use Thomas original documentation. And you will not need the additional Front Panl Components PCB or the machined/printed front panel of course!

4. Adding stage gates and end trigger
These are created by feeding the LED on signals into comparators. The additional circuitry is labeled with a leading 'A' to be easily distinguished from the original circuitry. On the PCB this circuitry can be found on one end, divided from the original circuitry by a white line. You have to populate this if you wat to use the Front Panel Components PCB.

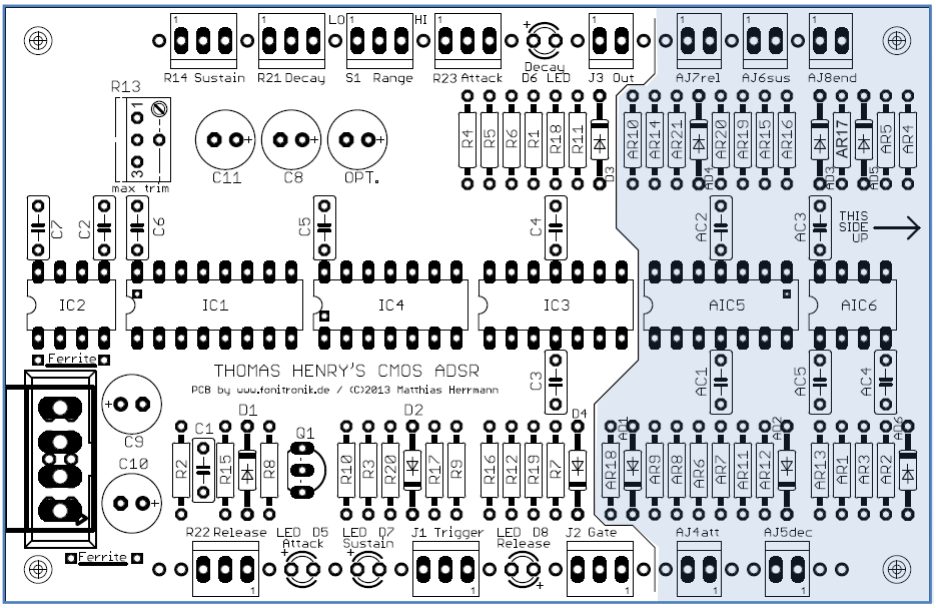

additional circuitry

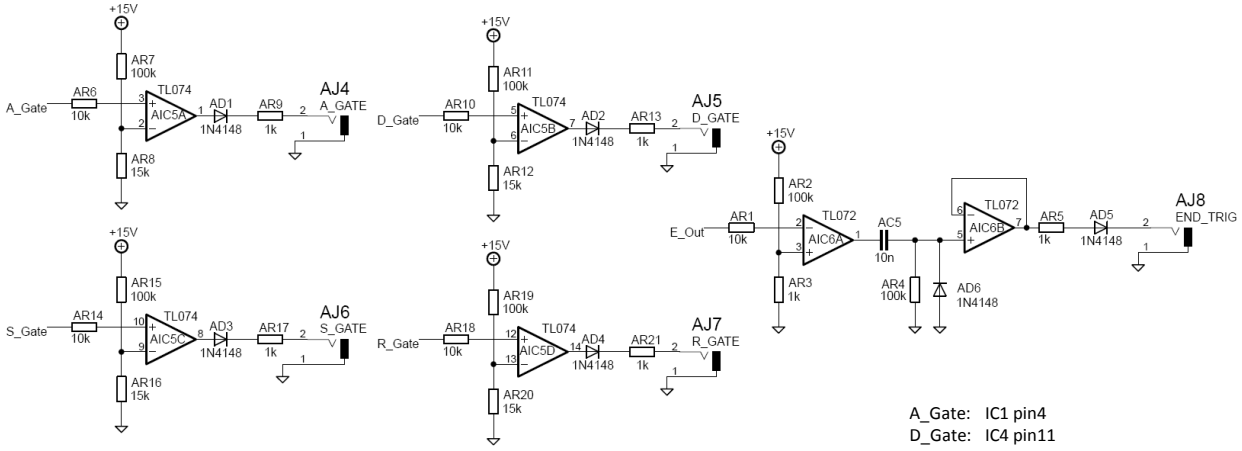

A_Gate: IC1 pin4
D_Gate: IC4 pin11
S_Gate: IC4 pin4
R_Gate: IC1 pin1
E_Out: J3 (junction R5/R6

Qty	Value	Parts (Footprint)
		Resistors
6	1k	AR3, AR5, AR9, AR13, AR17, AR21
5	10k	AR1, AR6, AR10, AR14, AR18
4	15k	AR8, AR12, AR16, AR20
6	100k	AR2, AR4, AR7, AR11, AR15, AR19
		Capacitors
5	10n	AC1, AC2, AC3, AC4, AC5
		Semi's
6	1N4148	AD1, AD2, AD3, AD4, AD5, AD6
1	TL072	AIC6
1	TL074	AIC5

Additional resistors for the new version sold via THONK and synthCube:
AR22, AR23 = 10k

Qty	Value	Parts (Footprint)
1	A_GATE	AJ4
1	D_GATE	AJ5
1	S_GATE	AJ6
1	R_GATE	AJ7
1	END_TRIG	AJ8

Not needed on the new version
sold via THONK and synthCube.

C7 Issue Quickfix

There is a minor error on the PCB routing: +V is conencted to IC2/pin8 (CMOS Timer) via C7, however, this capacitor should be mounted in parallel. This error had no impact on the functionality of the units I built, nevertheless, the correction of this error obviously improved the functionality of a few other people builds.
So here is the fix:

1. Remove IC2 from socket
2. Replace C7 by wirebridge
3. Mount C7 from IC2/pin8 to IC2/pin1, this could easily be done on the reverse side of the PCB.