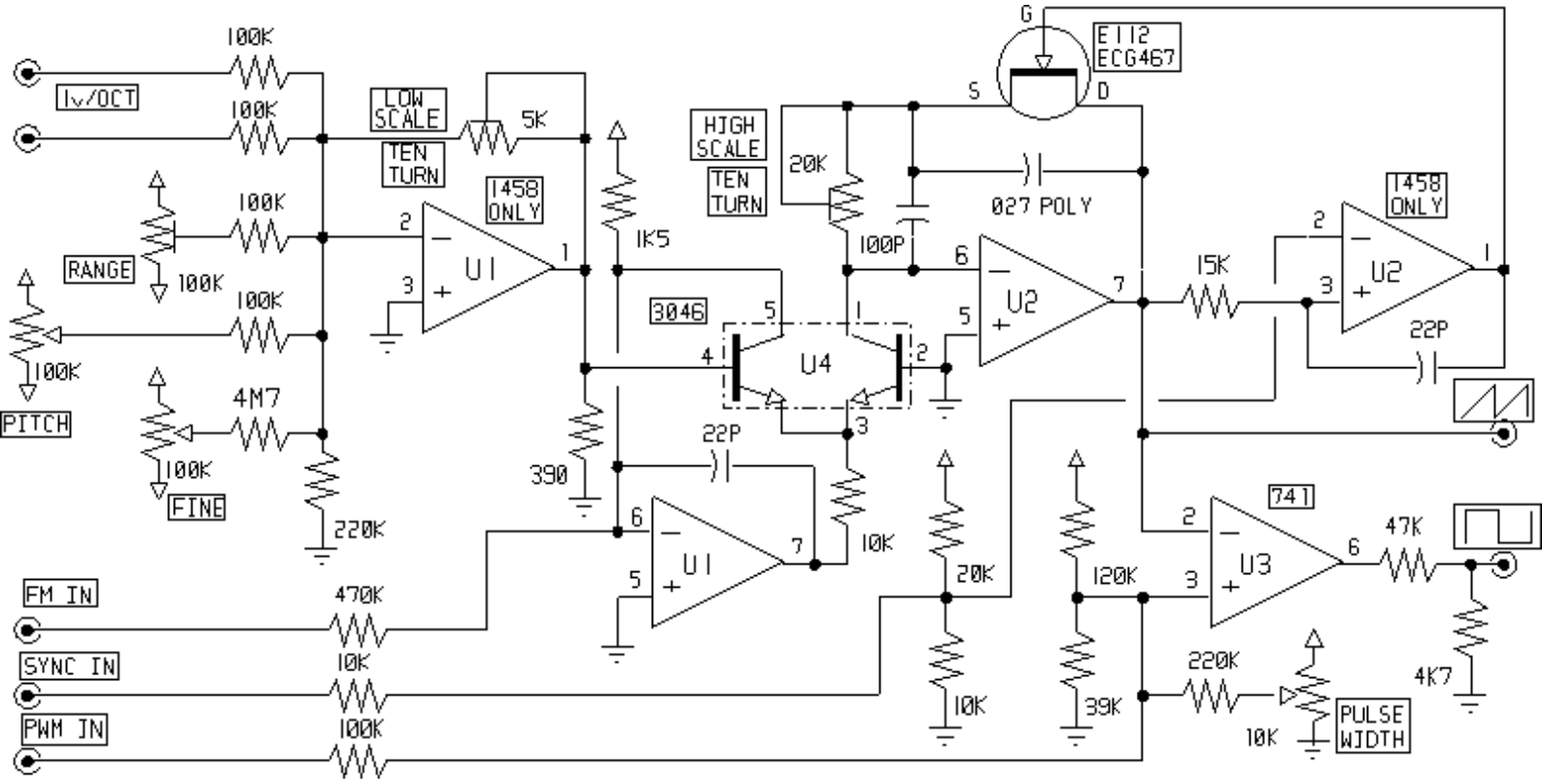
1v/OCT
100K
100K
LOW SCALE
TEN TURN
5K
1458 ONLY
U1
RANGE
100K
100K
100K
PITCH
100K
4M7
100K
FINE
220K
390
1K5
3046
U4
22P
U1
10K
HIGH SCALE
TEN TURN
20K
100P
.027 POLY
E112
ECG467
G
S
D
U2
15K
1458 ONLY
U2
22P
20K
10K
120K
39K
741
U3
47K
4K7
220K
10K
PULSE WIDTH
FM IN
470K
SYNC IN
10K
PWM IN
100K

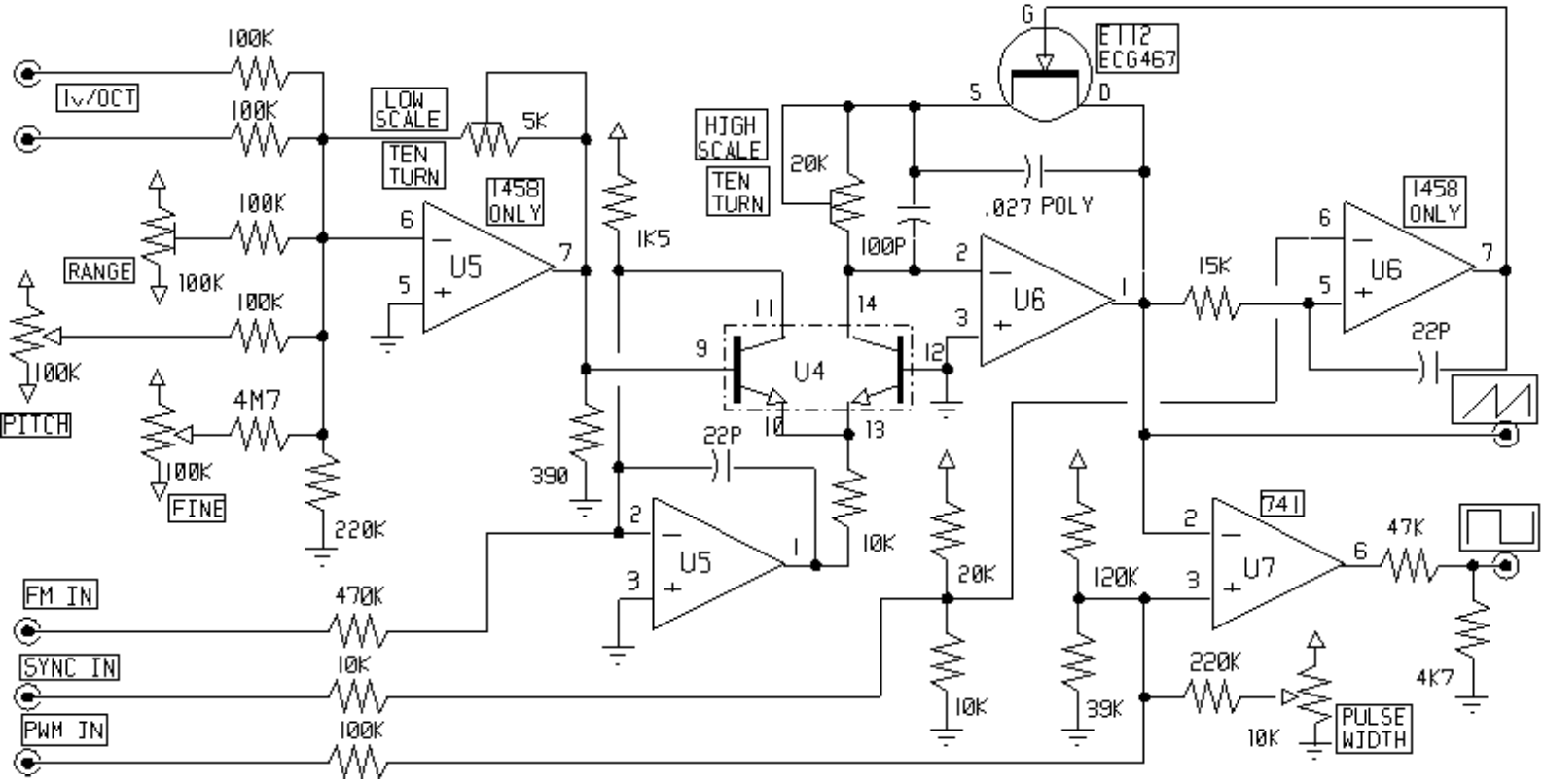
1v/OCT
100K
100K
LOW SCALE
TEN TURN
5K
1458 ONLY
U5
RANGE
100K
100K
100K
PITCH
100K
4M7
100K
FINE
220K
390
1K5
U4
22P
U5
10K
HIGH SCALE
TEN TURN
20K
100P
.027 POLY
E112
ECG467
G
S
D
U6
15K
1458 ONLY
U6
22P
20K
10K
120K
39K
741
U7
47K
4K7
220K
10K
PULSE WIDTH
FM IN
470K
SYNC IN
10K
PWM IN
100K

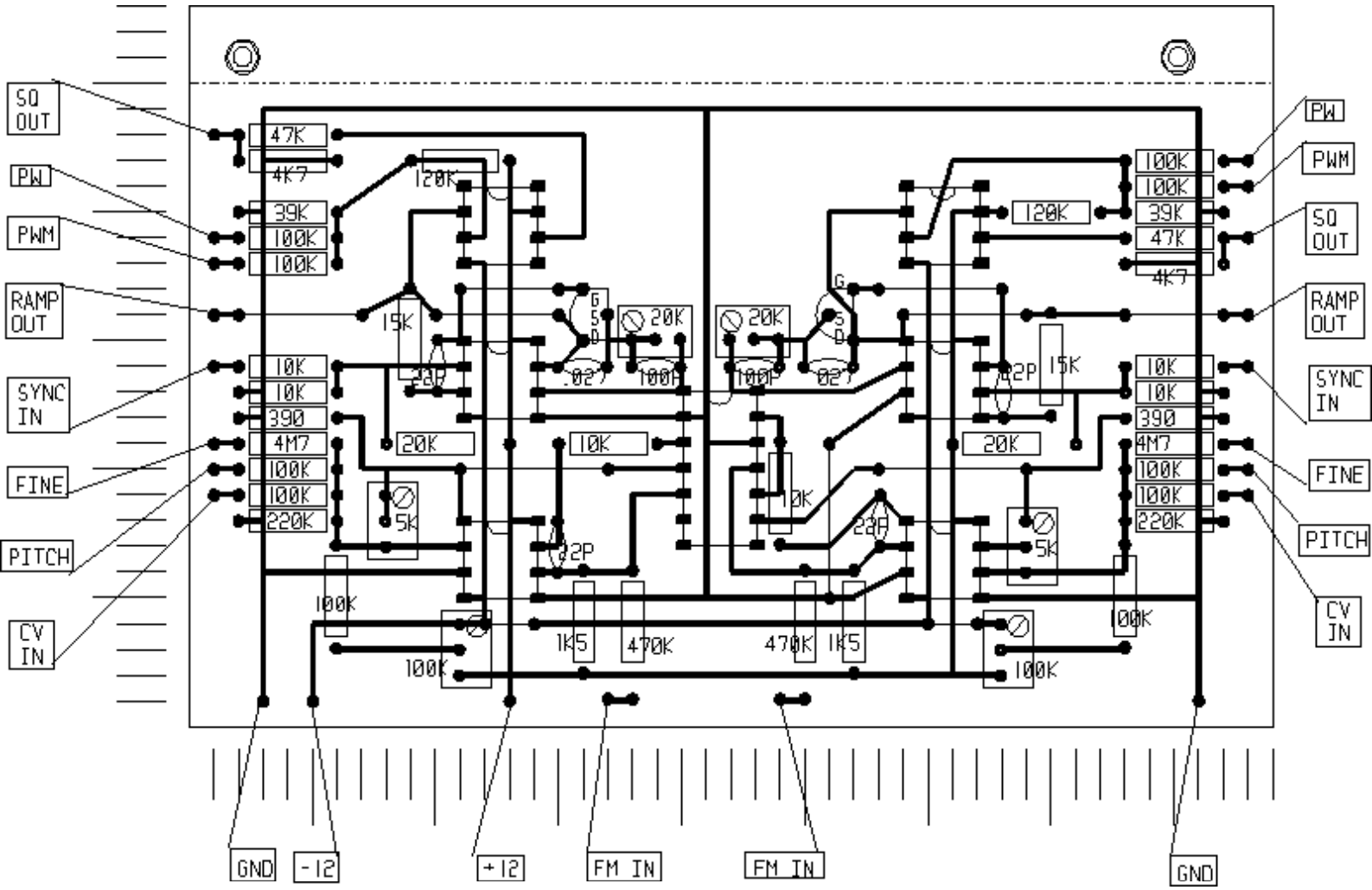
SQ OUT
PW
PWM
RAMP OUT
SYNC IN
FINE
PITCH
CV IN
47K
4K7
39K
100K
100K
10K
10K
390
4M7
100K
100K
220K
120K
15K
22P
20K
5K
.02
100P
10K
1K5
470K
100K
GND
-12
+12
FM IN
FM IN
GND
PW
PWM
SQ OUT
RAMP OUT
SYNC IN
FINE
PITCH
CV IN