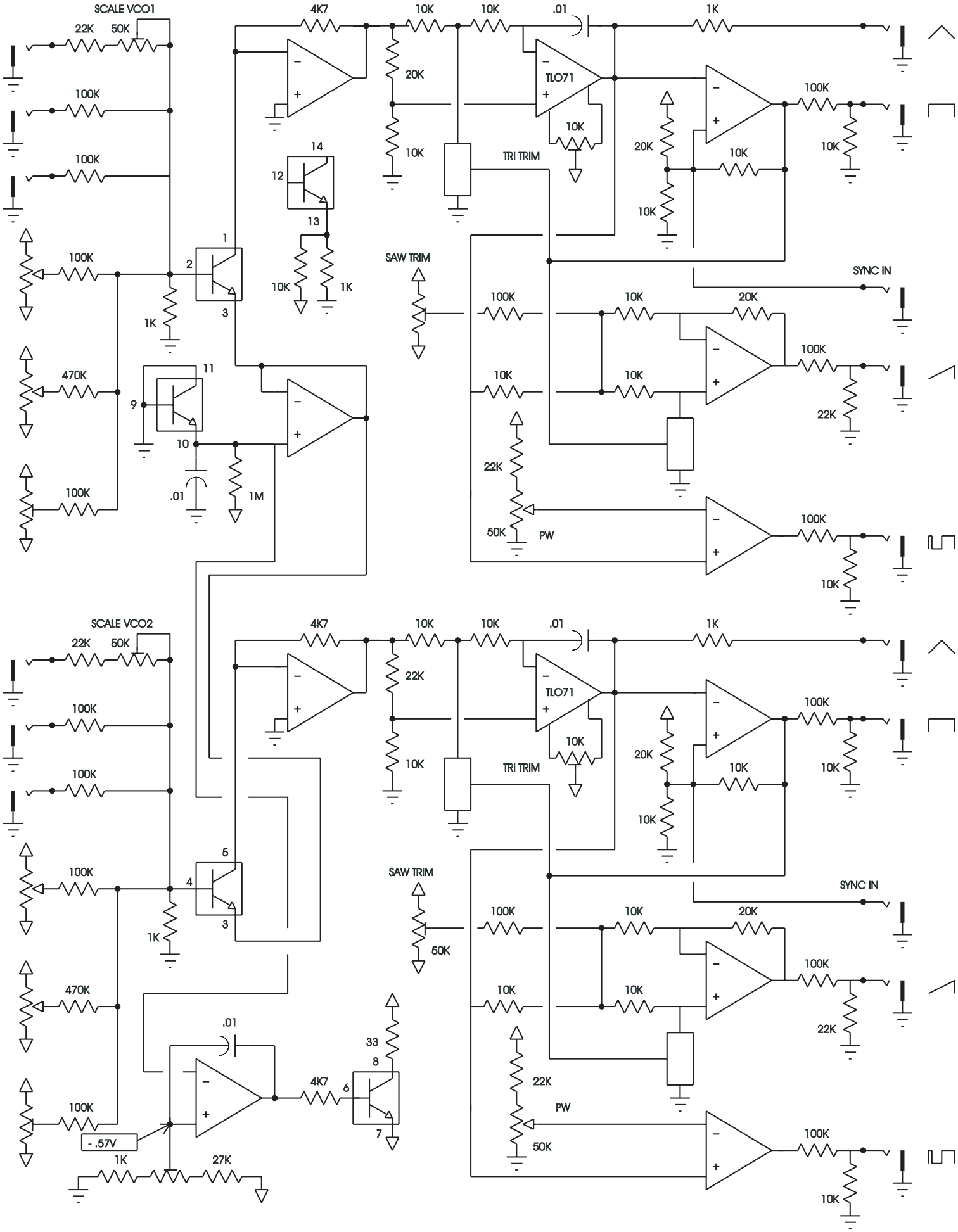
SCALE VCO1
22K
50K
100K
100K
100K
470K
100K
1K
4K7
10K
10K
.01
1K
20K
10K
TLO71
10K
TRI TRIM
20K
10K
10K
100K
10K
14
12
13
10K
1K
1
2
3
SAW TRIM
SYNC IN
100K
10K
20K
100K
10K
10K
22K
11
9
10
.01
1M
22K
50K
PW
100K
10K
SCALE VCO2
22K
50K
100K
100K
100K
470K
100K
1K
4K7
10K
10K
.01
1K
22K
10K
TLO71
10K
TRI TRIM
20K
10K
10K
100K
10K
5
4
3
SAW TRIM
50K
SYNC IN
100K
10K
20K
100K
10K
10K
22K
.01
33
8
4K7
6
7
22K
PW
50K
100K
- .57V
1K
27K
100K
10K

S6 VCO-SD